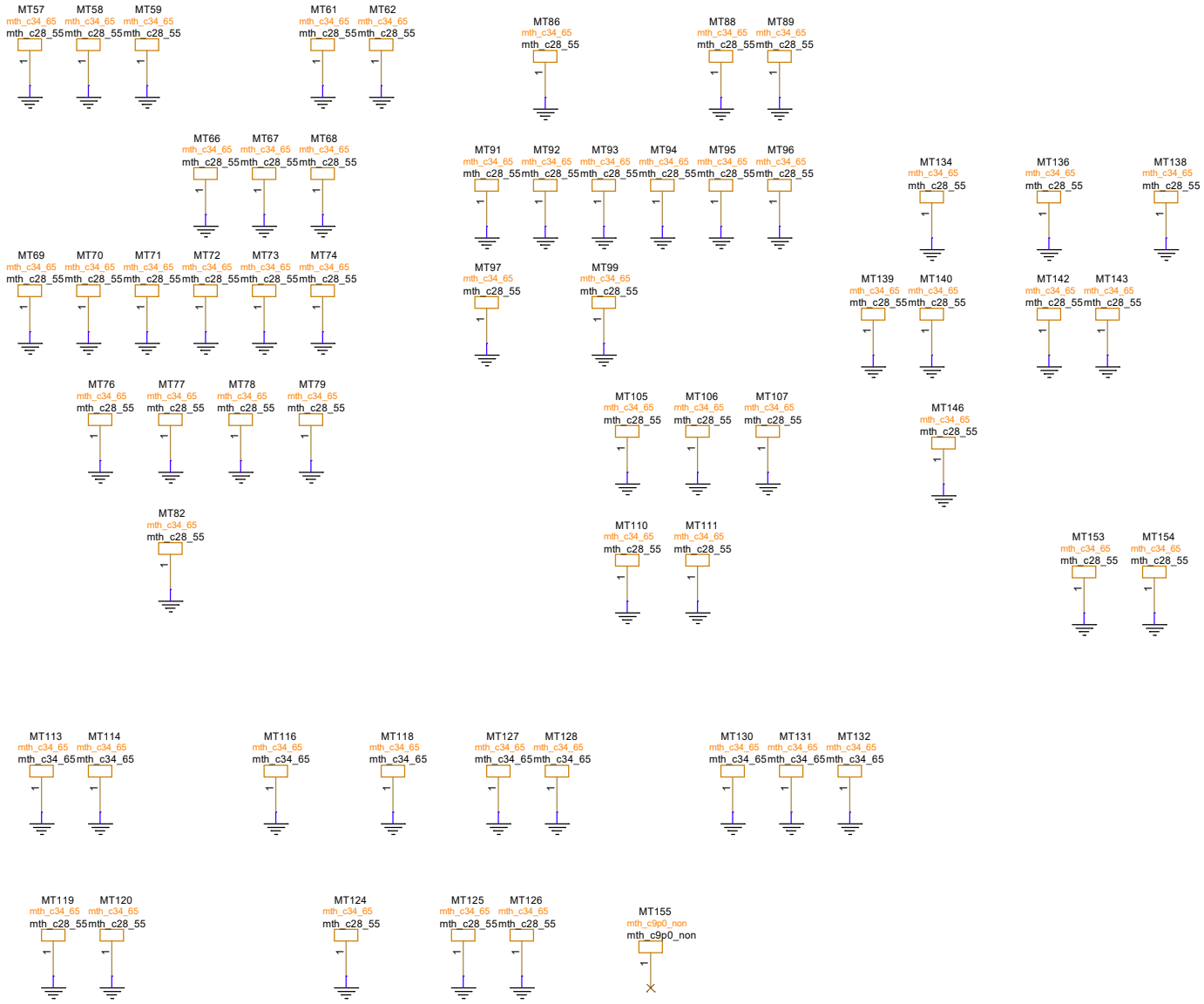

Size	A3	Ver	V1.2	Sheet	1	of	79
Project Name	6 Band AAU midBRD						
Module Name	0.00 HOLE						
DATE				Write	Review	Approval	
0. 2025.04.25		1. 2025.09.03					
2. <OrgAddr3>		3. <OrgAddr4>					

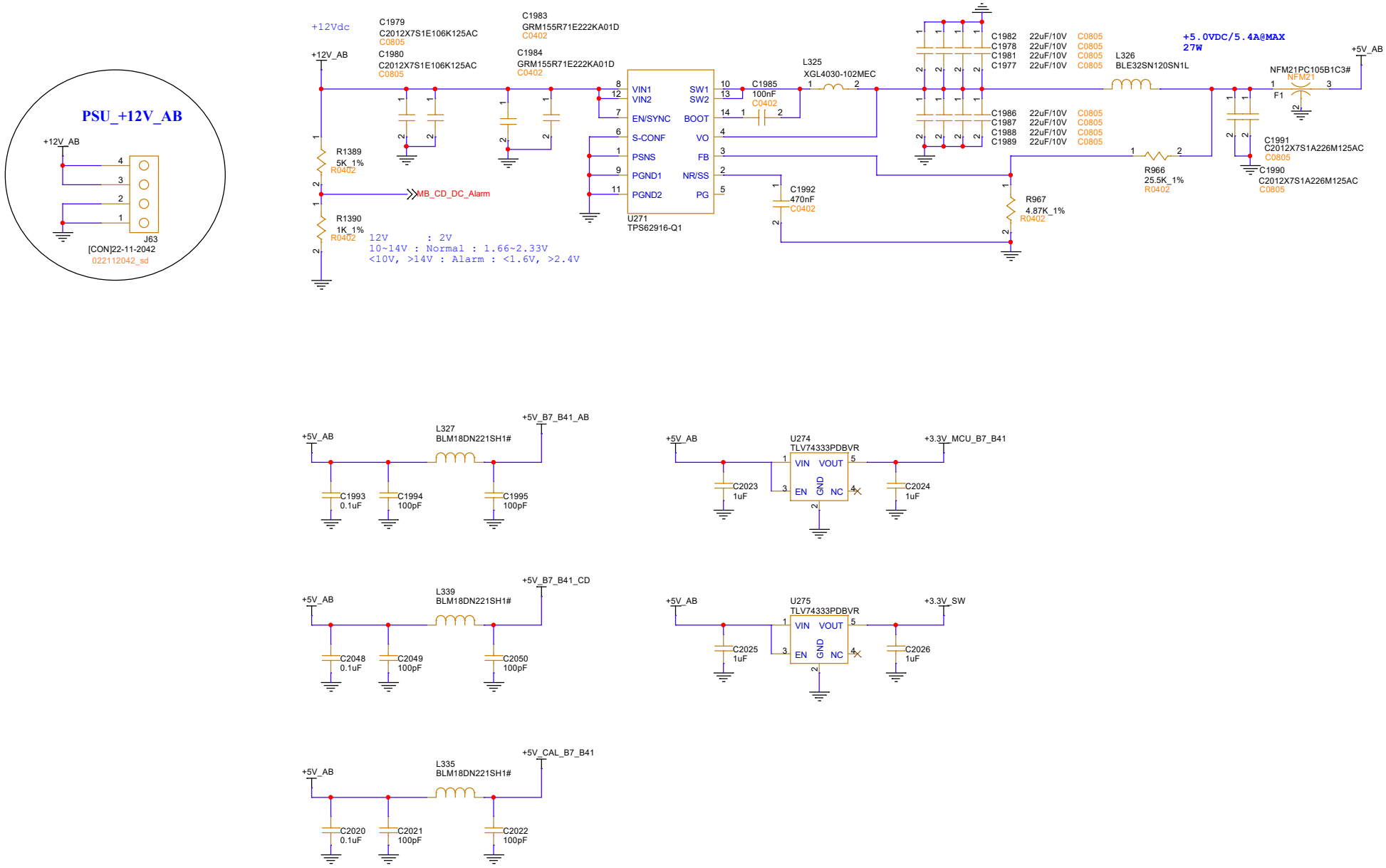

Size	A3	Ver	V1.2	Sheet	2 of 79
Project Name	6 Band AAU midBRD				
Module Name	1.01 DC_AB				
DATE		Write	Review	Approval	
0. 2025.04.25	1. 2025.09.03				
2. <OrgAddr3>	3. <OrgAddr4>				

Parallel WIRELESS

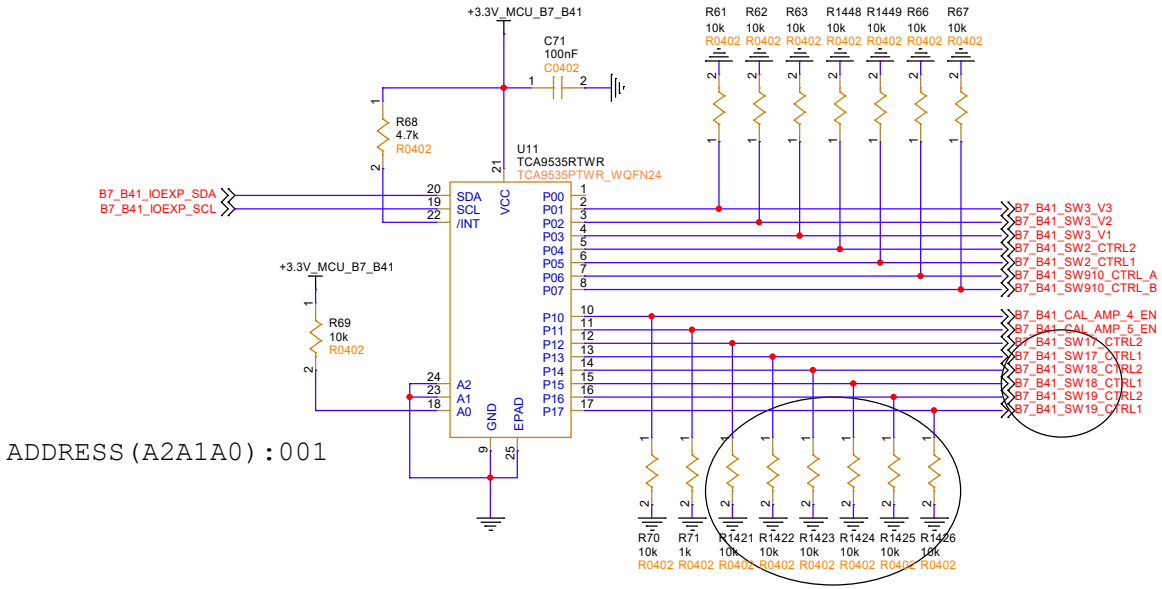

Size	A3	Ver	V1.2	Sheet	8	of	79
Project Name	6 Band AAU midBRD						
Module Name	1.07 IOEXP_B7_001						
DATE				Write	Review	Approval	
0. 2025.04.25		1. 2025.09.03					
2. <OrgAddr3>		3. <OrgAddr4>					

Parallel WIRELESS

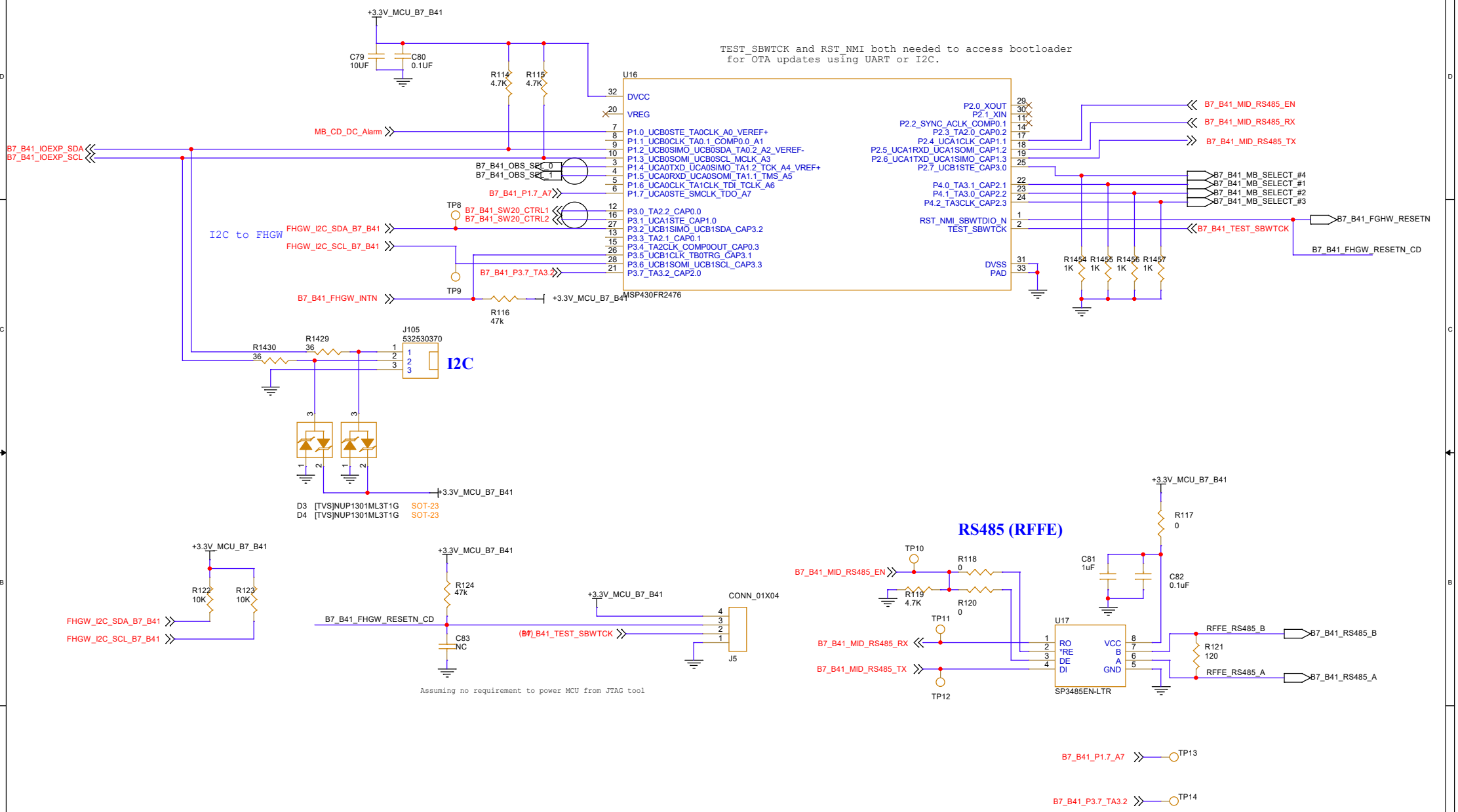

Size	A3	Ver	V1.2	Sheet	12 of 79
Project Name	6 Band AAU midBRD				
Module Name	1.11 MCU_B7_B41				
DATE				Write	Review	Approval
0. 2025.05.21		1. 2025.09.03				
2. <OrgAddr3>		3. <OrgAddr4>				

Parallel WIRELESS

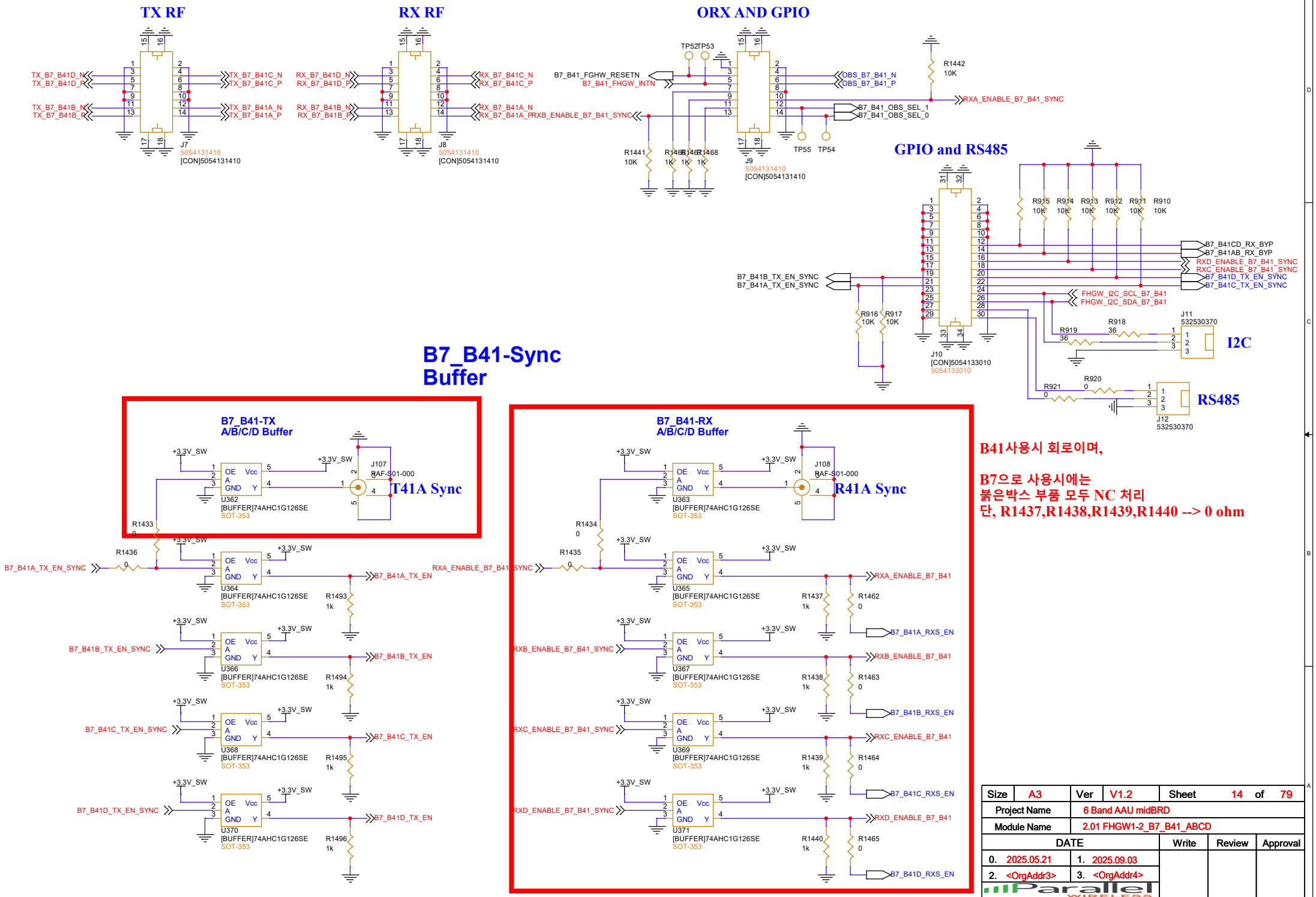
TX RF
RX RF
ORX AND GPIO
GPIO and RS485
B7_B41-Sync Buffer
B7_B41-TX A/B/C/D Buffer
B7_B41-RX A/B/C/D Buffer
T41A Sync
R41A Sync
I2C
RS485
B41사용시 회로이며,
B7으로 사용시에는
붉은박스 부품 모두 NC 처리
단, R1437,R1438,R1439,R1440 --> 0 ohm
Size A3
Ver V1.2
Sheet 14 of 79
Project Name 6 Band AAU midBRD
Module Name 2.01 FHGW1-2_B7_B41_ABCD
DATE
Write
Review
Approval
0. 2025.05.21
1. 2025.09.03
2. <OrgAddr3>
3. <OrgAddr4>
Parallel WIRELESS

midBRD to RFFE
B7_B41_ABCD_#1

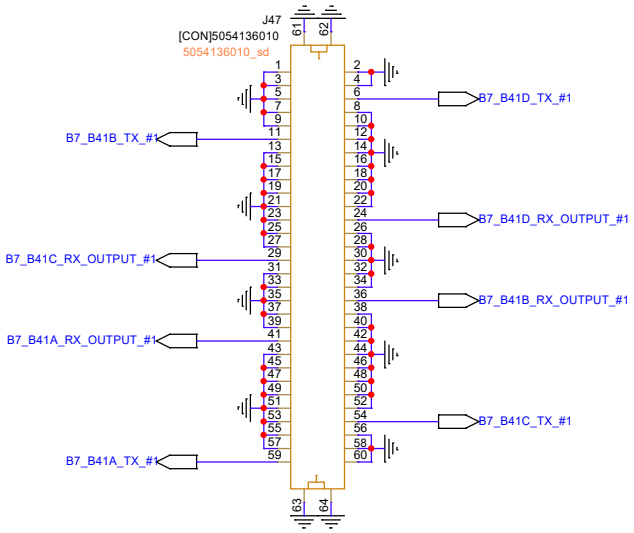

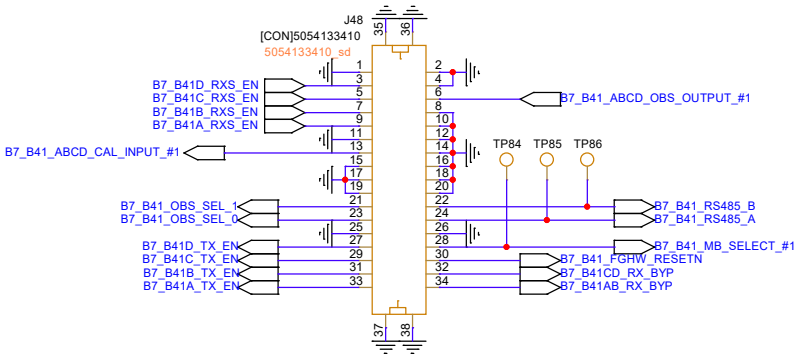

Size	A3	Ver	V1.2	Sheet	23 of 79
Project Name	6 Band AAU midBRD				
Module Name	2.10 RFFE_B7_B41_#1				
DATE				Write	Review	Approval
0. 2025.05.21	1. 2025.09.03					
2. <OrgAddr3>	3. <OrgAddr4>					

Parallel WIRELESS

midBRD to RFFE
B7_B41_ABCD_#2

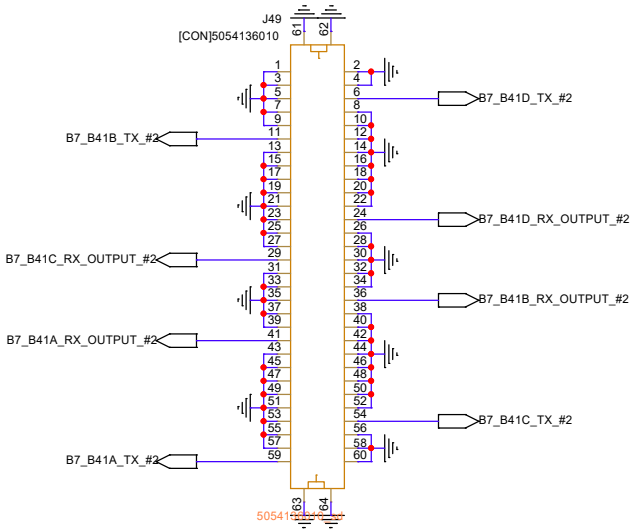

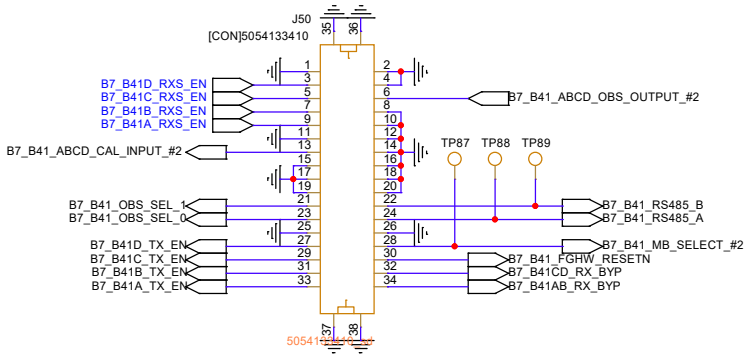

Size	A3	Ver	V1.2	Sheet	24 of 79
Project Name	6 Band AAU midBRD				
Module Name	2.11 RFFE_B7_B41_#2				
DATE				Write	Review	Approval
0. 2025.05.21	1. 2025.09.03					
2. <OrgAddr3>	3. <OrgAddr4>					

Parallel WIRELESS

midBRD to RFFE
B7_B41_ABCD_#3

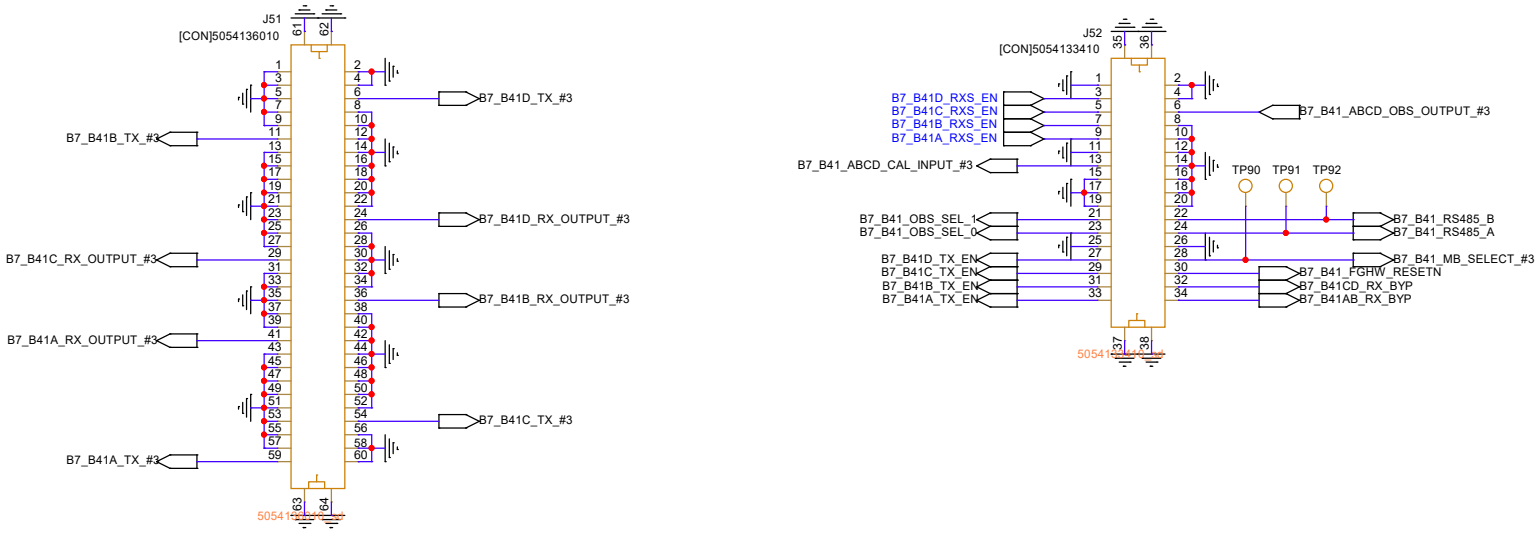

Size	A3	Ver	V1.2	Sheet	25 of 79
Project Name	6 Band AAU midBRD				
Module Name	2.12 RFFE_B7_B41_#3				
DATE				Write	Review	Approval
0. 2025.05.21	1. 2025.09.03					
2. <OrgAddr3>	3. <OrgAddr4>					

Parallel WIRELESS

midBRD to RFFE
B7_B41_ABCD_#4

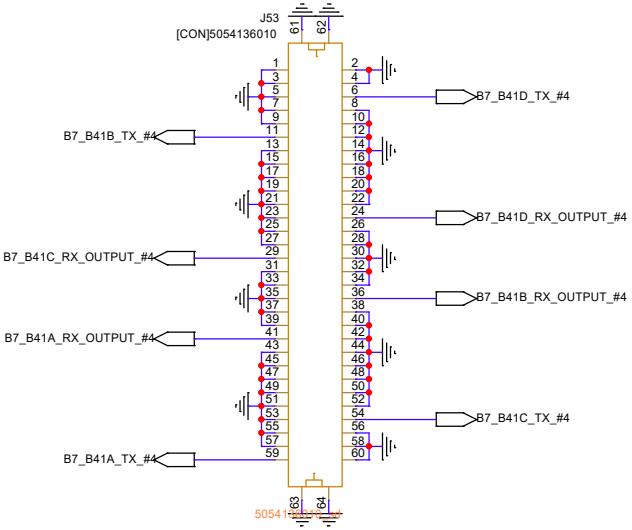

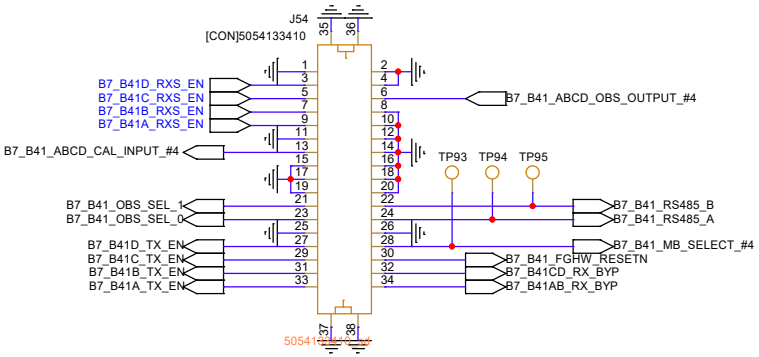

Size	A3	Ver	V1.2	Sheet	26 of 79
Project Name	6 Band AAU midBRD				
Module Name	2.13 RFFE_B7_B41_#4				
DATE				Write	Review	Approval
0. 2025.05.21	1. 2025.09.03					
2. <OrgAddr3>	3. <OrgAddr4>					

Parallel WIRELESS

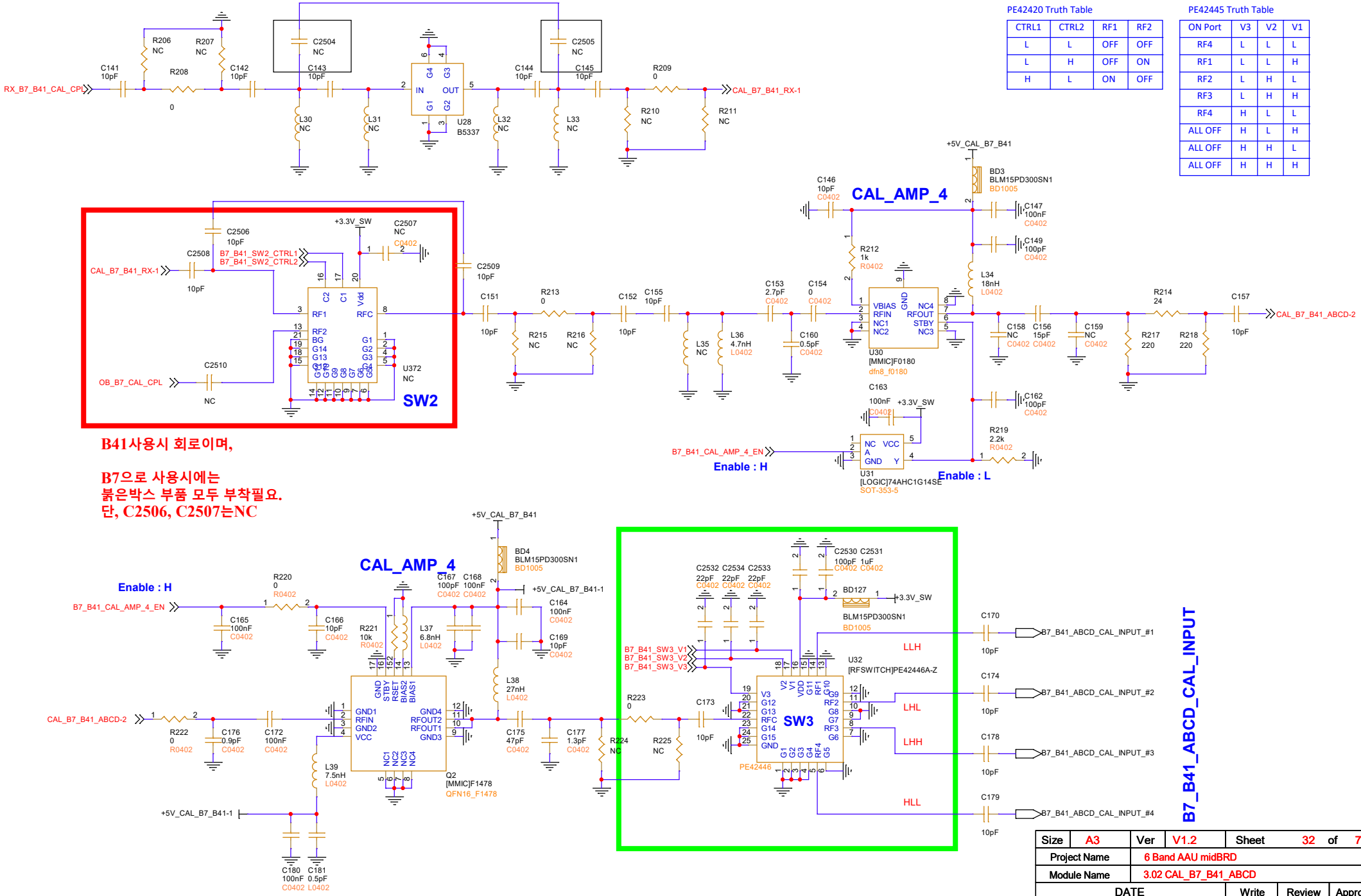

PE42420 Truth Table			
CTRL1	CTRL2	RF1	RF2
L	L	OFF	OFF
L	H	OFF	ON
H	L	ON	OFF

PE42445 Truth Table			
ON Port	V3	V2	V1
RF4	L	L	L
RF1	L	L	H
RF2	L	H	L
RF3	L	H	H
RF4	H	L	L
ALL OFF	H	L	H
ALL OFF	H	H	L
ALL OFF	H	H	H

Size	A3	Ver	V1.2	Sheet	32 of 79
Project Name	6 Band AAU midBRD				
Module Name	3.02 CAL_B7_B41_ABCD				
DATE		Write	Review	Approval	
0. 2025.05.21	1. 2025.09.03				
2. <OrgAddr3>	3. <OrgAddr4>				

Parallel WIRELESS

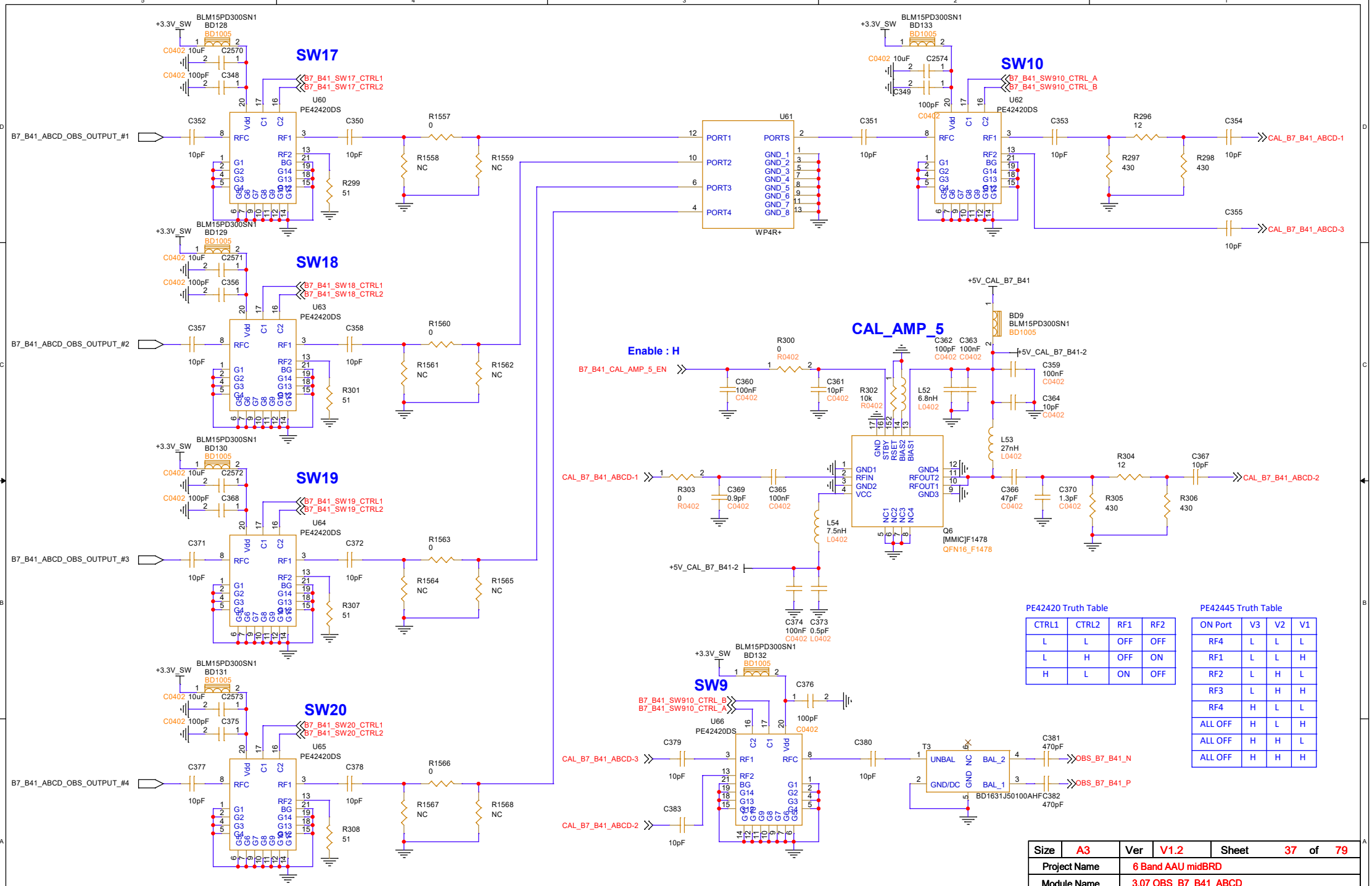

PE42420 Truth Table

CTRL1	CTRL2	RF1	RF2
L	L	OFF	OFF
L	H	OFF	ON
H	L	ON	OFF

PE42445 Truth Table

ON Port	V3	V2	V1
RF4	L	L	L
RF1	L	L	H
RF2	L	H	L
RF3	L	H	H
RF4	H	L	L
ALL OFF	H	L	H
ALL OFF	H	H	L
ALL OFF	H	H	H

Size	A3	Ver	V1.2	Sheet	37 of 79
Project Name	6 Band AAU midBRD				
Module Name	3.07 OBS_B7_B41_ABCD				
DATE		Write	Review	Approval	
0. 2025.05.21	1. 2025.09.03				
2. <OrgAddr3>	3. <OrgAddr4>				

Parallel WIRELESS

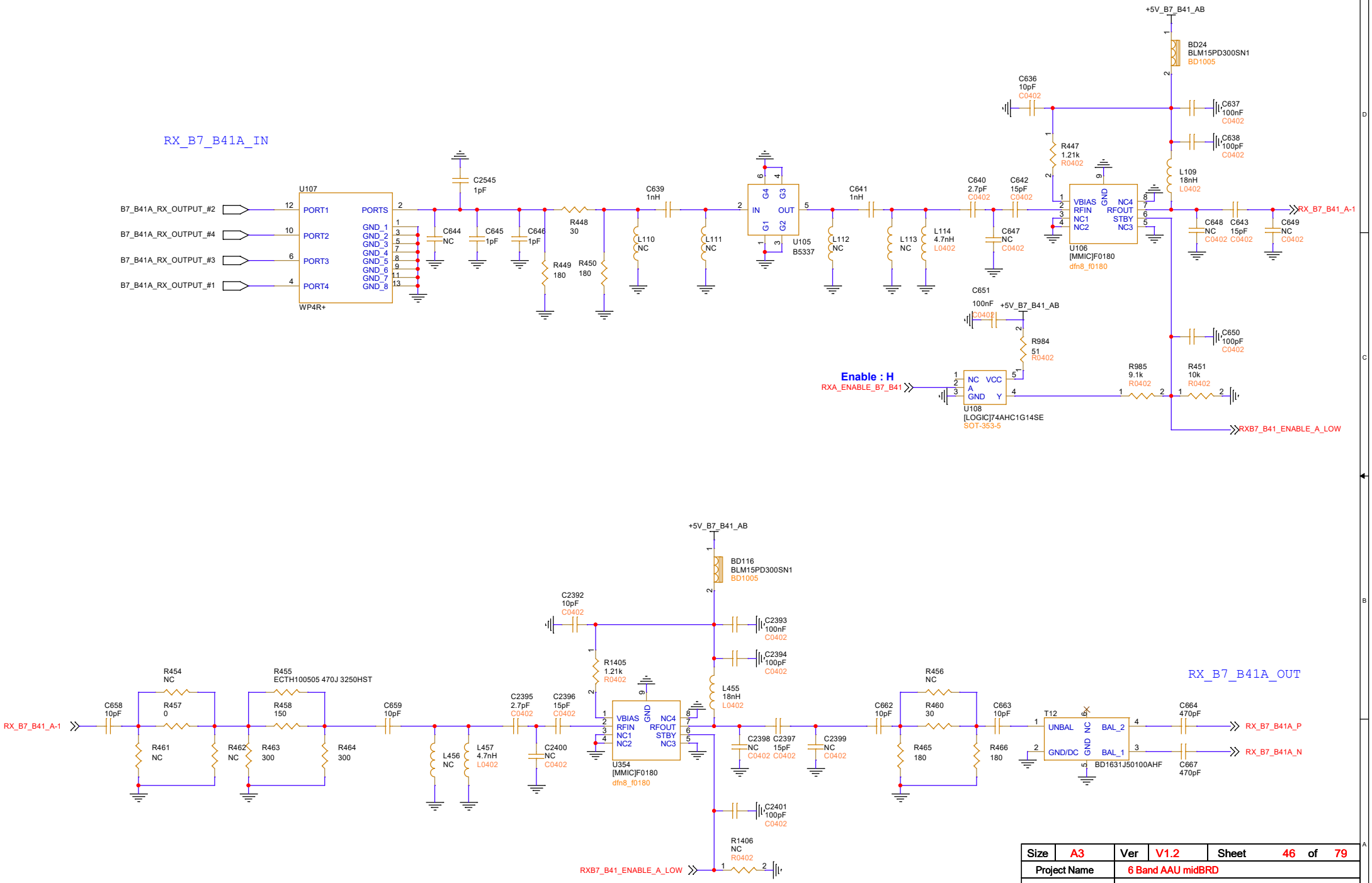

Size	A3	Ver	V1.2	Sheet	46 of 79
Project Name	6 Band AAU midBRD				
Module Name	4.07 RX_B7_B41_A				
DATE		Write	Review	Approval	
0. 2025.05.21	1. 2025.09.03				
2. <OrgAddr3>	3. <OrgAddr4>				

Parallel WIRELESS

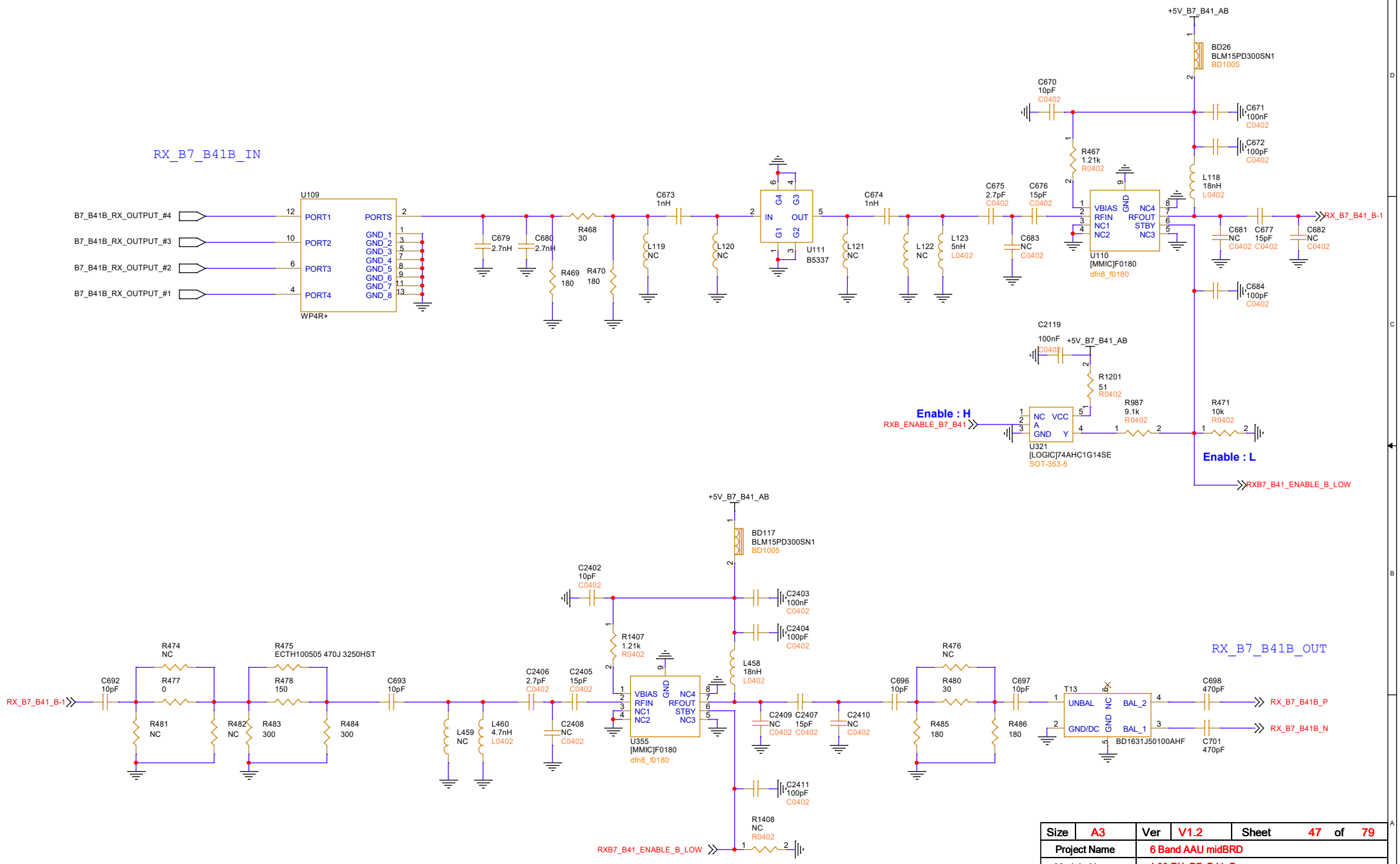

Size	A3	Ver	V1.2	Sheet	47 of 79
Project Name	6 Band AAU midBRD				
Module Name	4.08 RX_B7_B41_B				
DATE		Write	Review	Approval	
0. 2025.05.21	1. 2025.09.03				
2. <OrgAddr3>	3. <OrgAddr4>				

Parallel WIRELESS

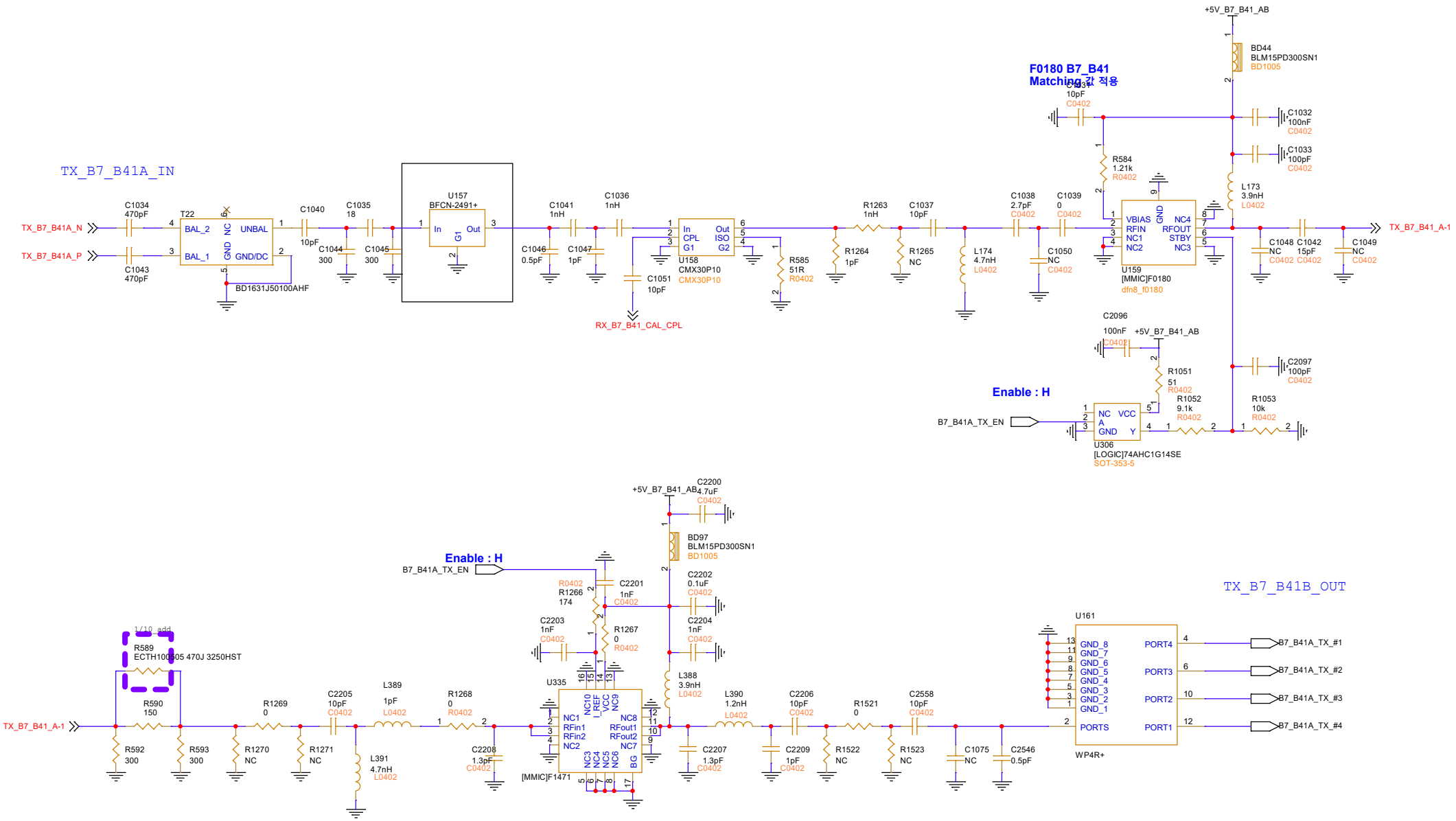

Size	A3	Ver	V1.2	Sheet	56 of 79
Project Name	6 Band AAU midBRD				
Module Name	4.17 TX_B7_B41_A				
DATE		Write	Review	Approval	
0. 2025.05.21	1. 2025.09.03				
2. <OrgAddr3>	3. <OrgAddr4>				

Parallel WIRELESS

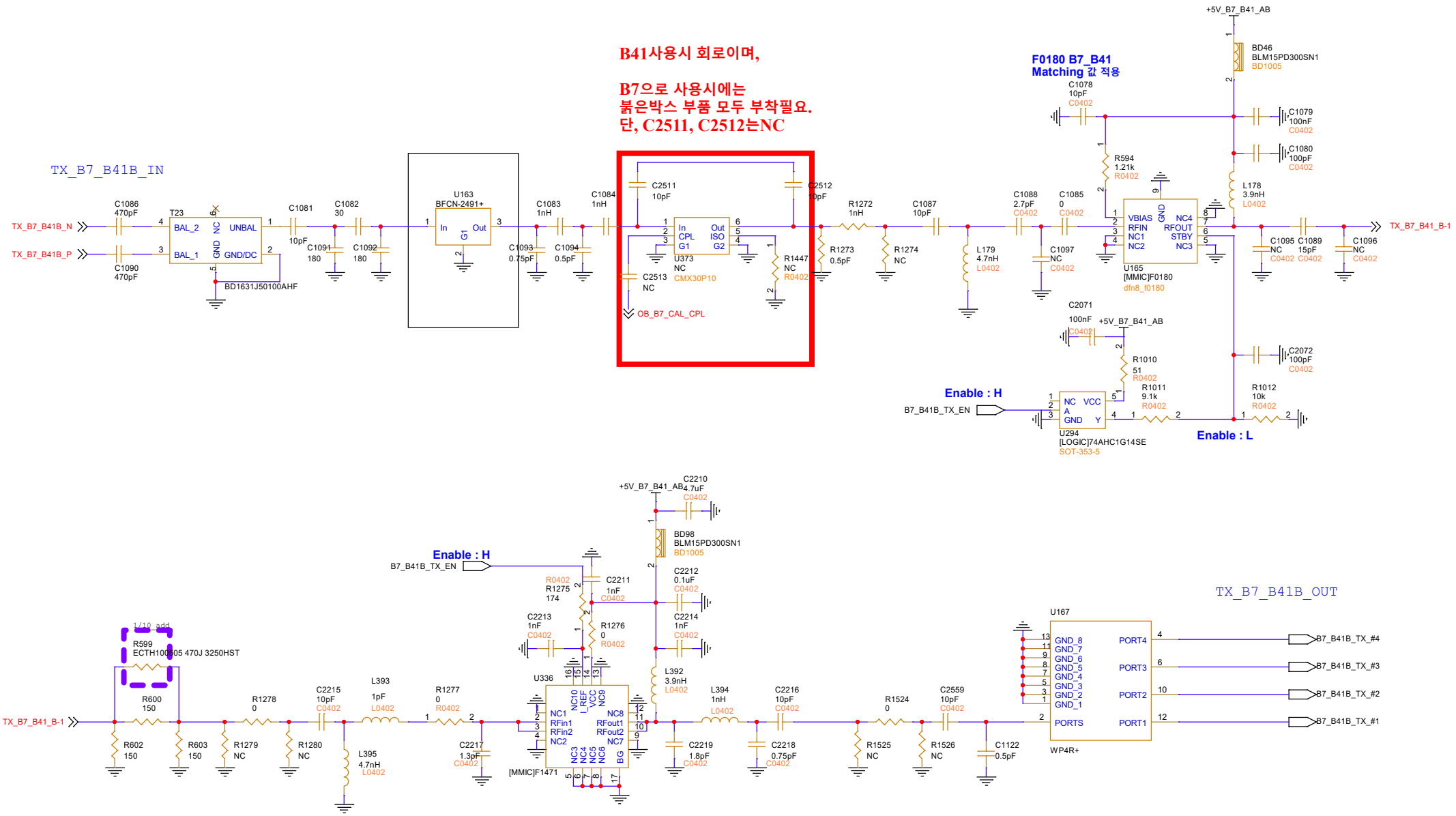

Size	A3	Ver	V1.2	Sheet	57 of 79
Project Name	6 Band AAU midBRD				
Module Name	4.18 TX_B7_B41_B				
DATE		Write	Review	Approval	
0. 2025.05.21	1. 2025.09.03				
2. <OrgAddr3>	3. <OrgAddr4>				

Parallel WIRELESS

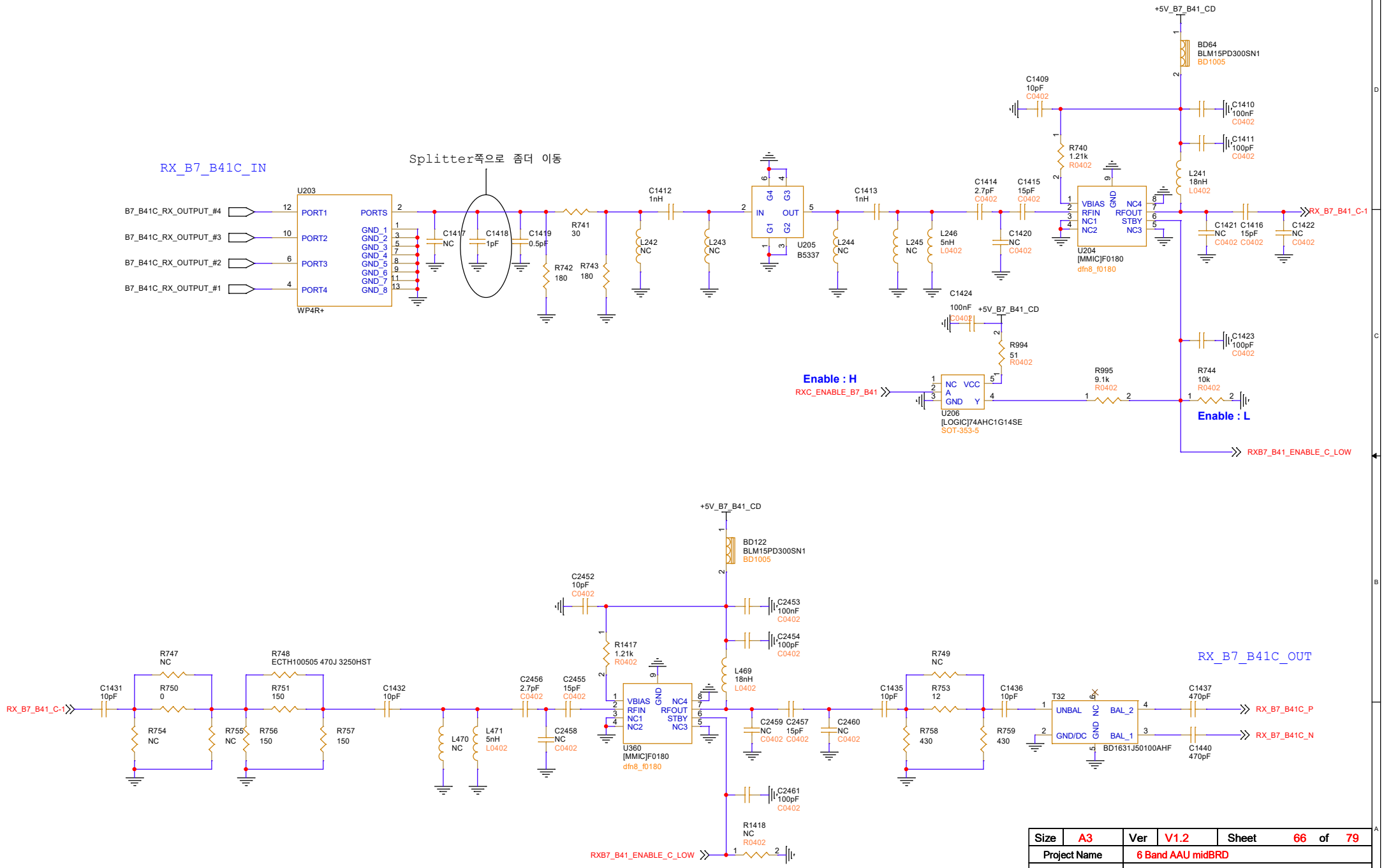

Size	A3	Ver	V1.2	Sheet	66 of 79
Project Name	6 Band AAU midBRD				
Module Name	5.07 RX_B7_B41_C				
DATE		Write	Review	Approval	
0. 2025.05.21	1. 2025.09.03				
2. <OrgAddr3>	3. <OrgAddr4>				

Parallel WIRELESS

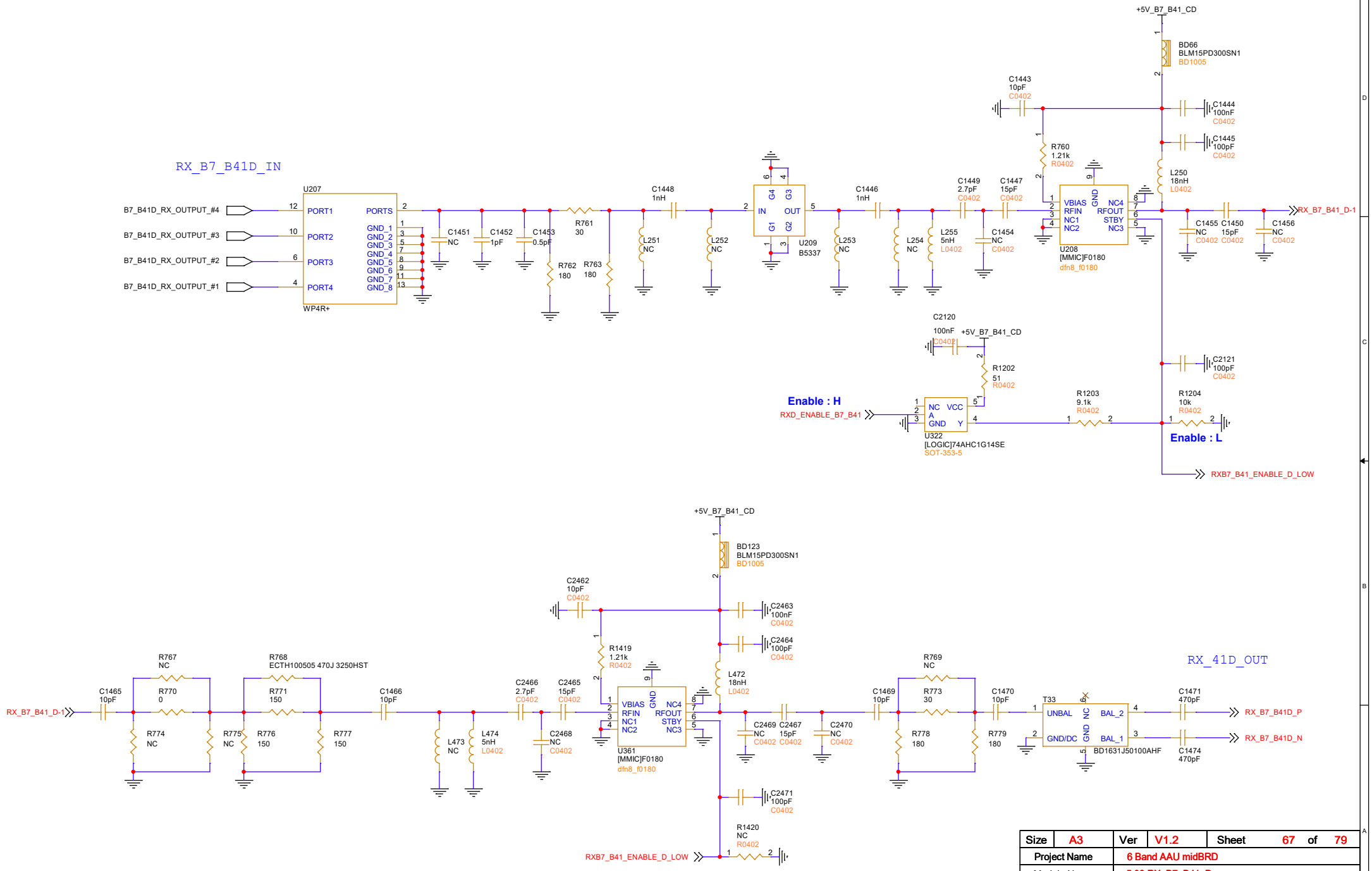

Size	A3	Ver	V1.2	Sheet	67 of 79
Project Name	6 Band AAU midBRD				
Module Name	5.08 RX_B7_B41_D				
DATE		Write	Review	Approval	
0. 2025.05.21	1. 2025.09.03				
2. <OrgAddr3>	3. <OrgAddr4>				

Parallel WIRELESS

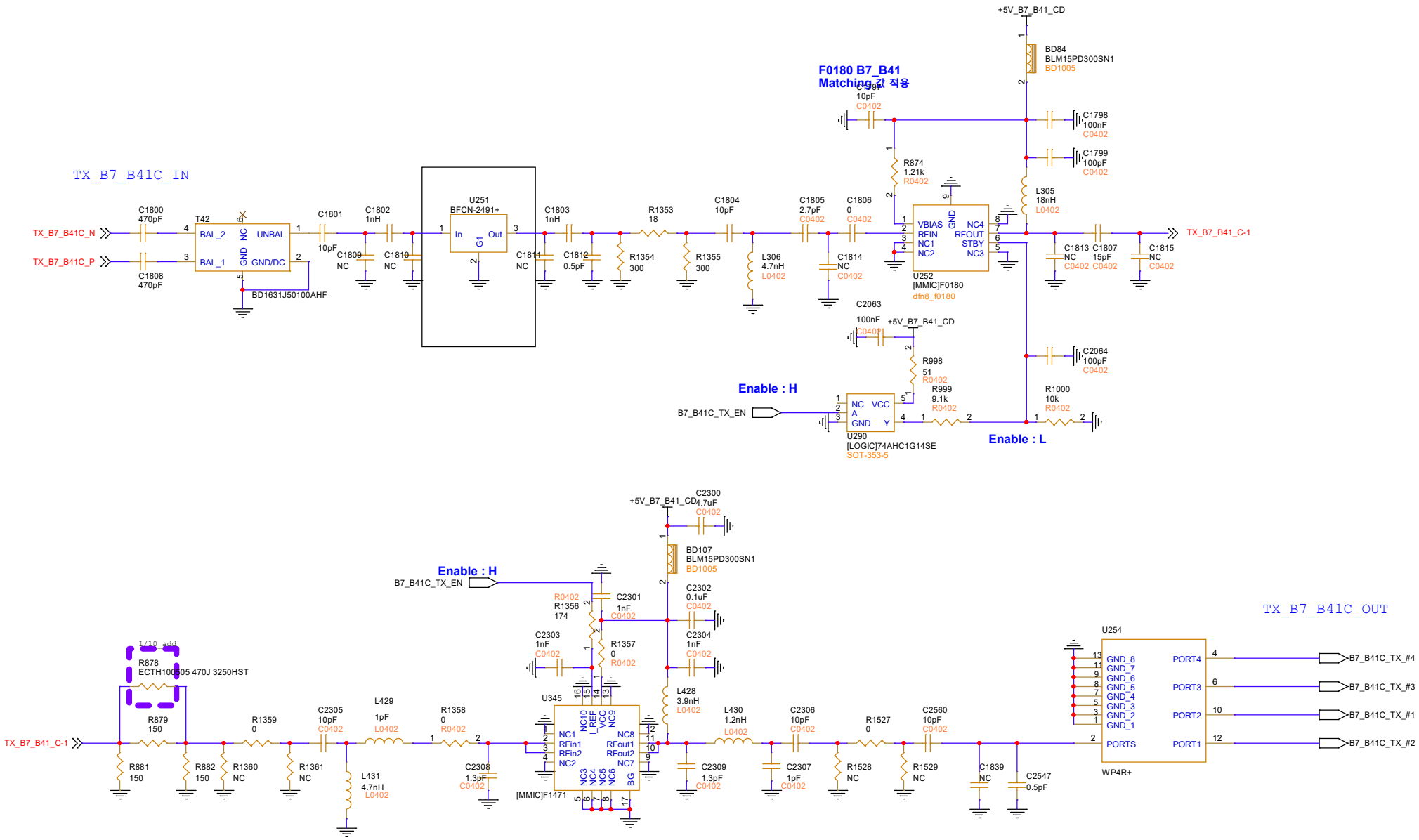

Size	A3	Ver	V1.2	Sheet	76 of 79
Project Name	6 Band AAU midBRD				
Module Name	5.17 TX_B7_B41_C				
DATE		Write	Review	Approval	
0. 2025.04.25	1. 2025.09.03				
2. <OrgAddr3>	3. <OrgAddr4>				

Parallel WIRELESS

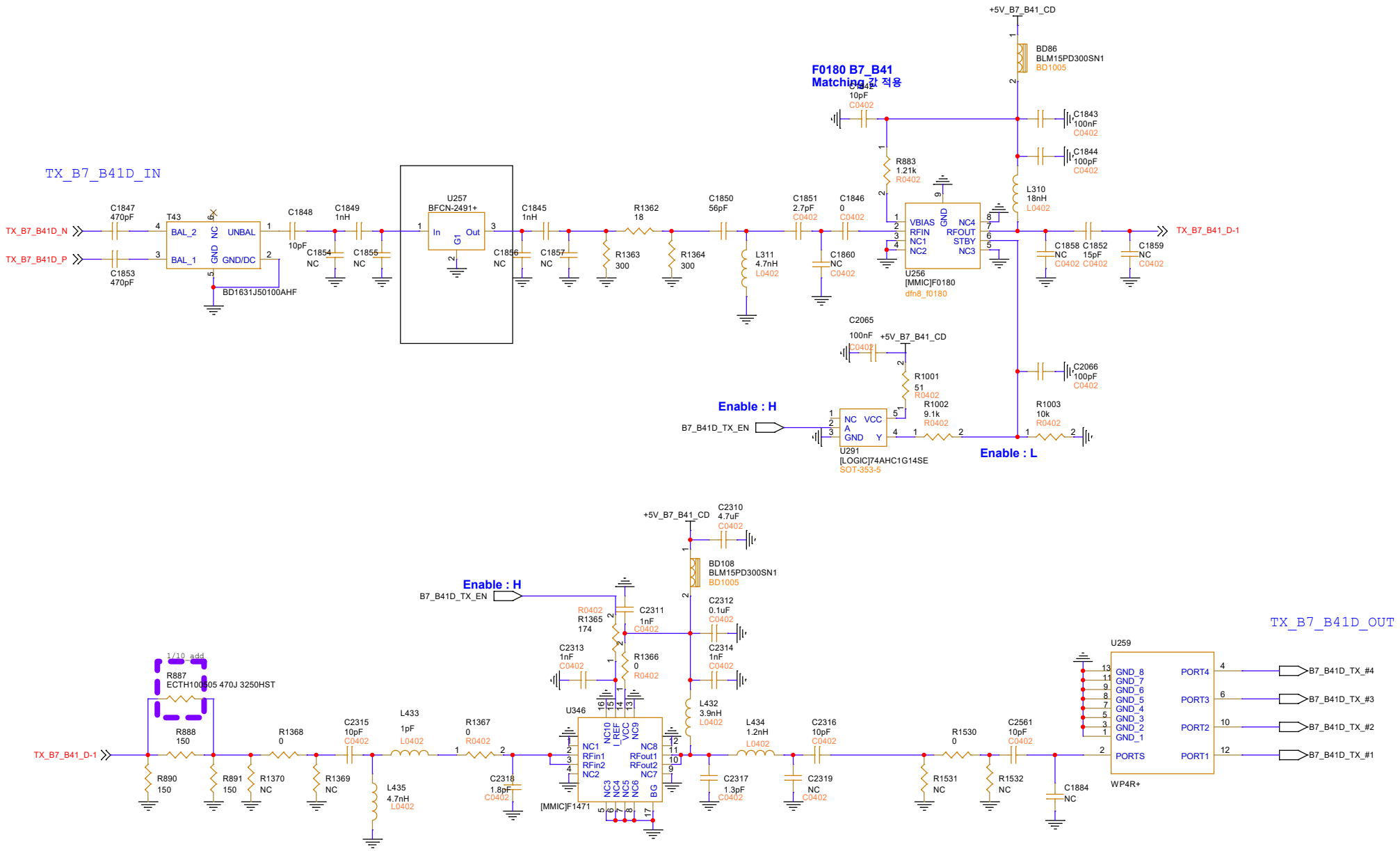

Size	A3	Ver	V1.2	Sheet	77 of 79
Project Name	6 Band AAU midBRD				
Module Name	5.18 TX_B7_B41_D				
DATE		Write	Review	Approval	
0. 2025.04.25	1. 2025.09.03				
2. <OrgAddr3>	3. <OrgAddr4>				

Parallel WIRELESS